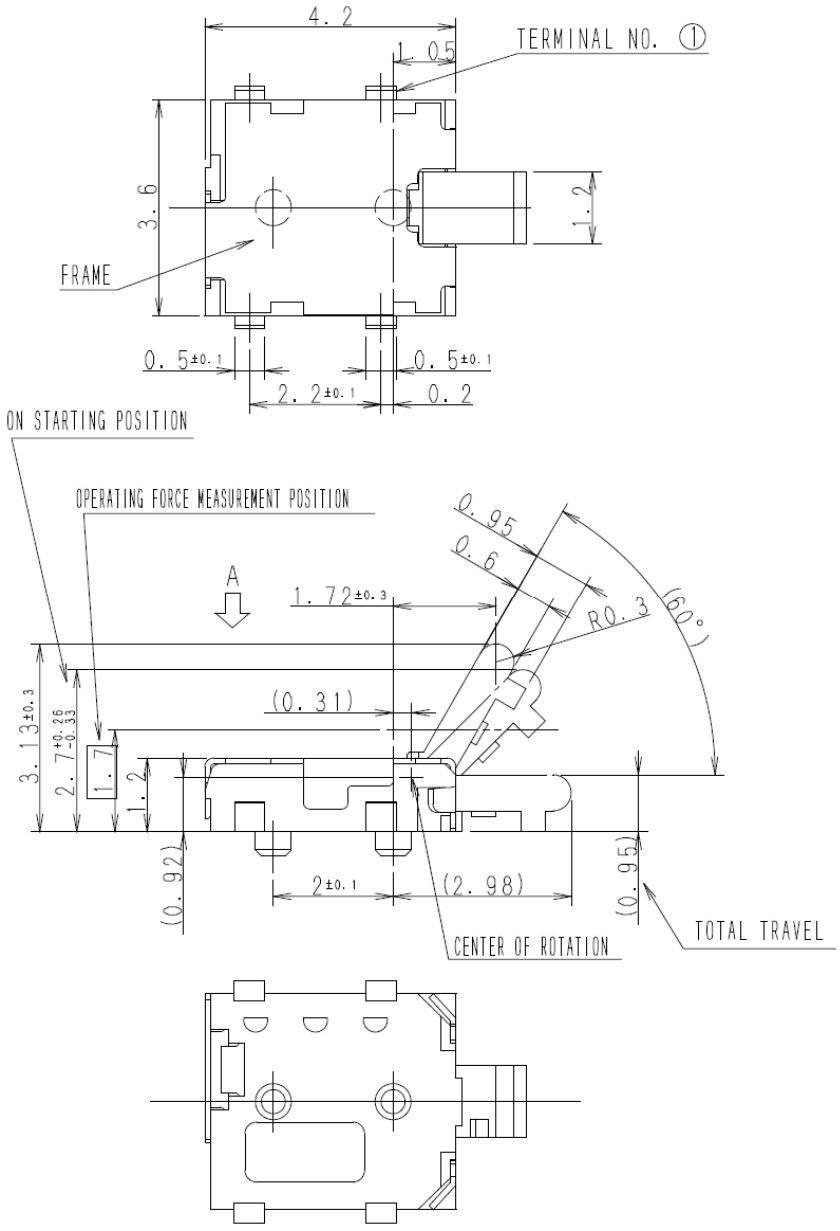

REFERENCE PATTERN FOR REFLOW SOLDERING

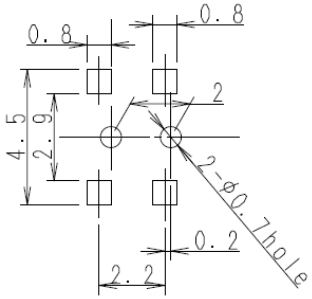

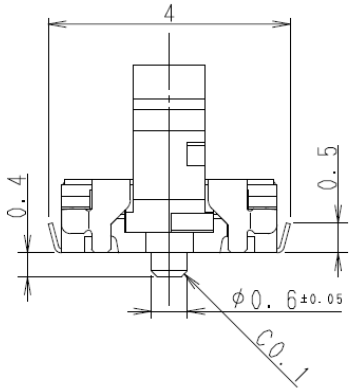

TERMINAL ARRANGEMENT (SEE DIRECTION "A")	CIRCUIT DIAGRAM
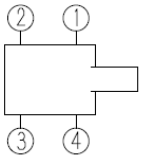	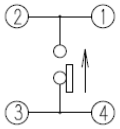

銓基電子股份有限公司 ROKI ELECTRONICS CO., LTD.	PART NAME : DETECTOR SWITCH	SCALE :
	PART NO : DT37M-PF	UNIT : mm
	TOLERANCE : ±0.2 mm／ANGULAR DIMSNSION±3 °	VER : R01